ABIGAIL REGAN | CLASS: ID 425 | KATHLEEN RYAN

WHEEL OF LITERATURE

by ABIGAIL REGAN

WHEEL OF LITERATURE IS A *LITTLE FREE LIBRARY* PROPOSAL FOR UNIONTOWN, WA,. IT IS INSPIRED BY UNIONTOWN'S RICH AGRICULTURAL HISTORY & THE TRADEMARK WHEEL FENCE AT 'ARTISANS AT THE DAHMEN BARN.' SECONDARY, THE STRUCTURE WILL POSE AS A SIGN FOR THE TOWN. THE SELECTED MATERIALS WILL ENABLE IT TO BLEND IN WITH ITS CONTEXTUAL SETTING, INCLUDING THE EXISTING EXPOSED DRAINPIPES ALONG BRICK WALLS IN THE MAIN STREET.

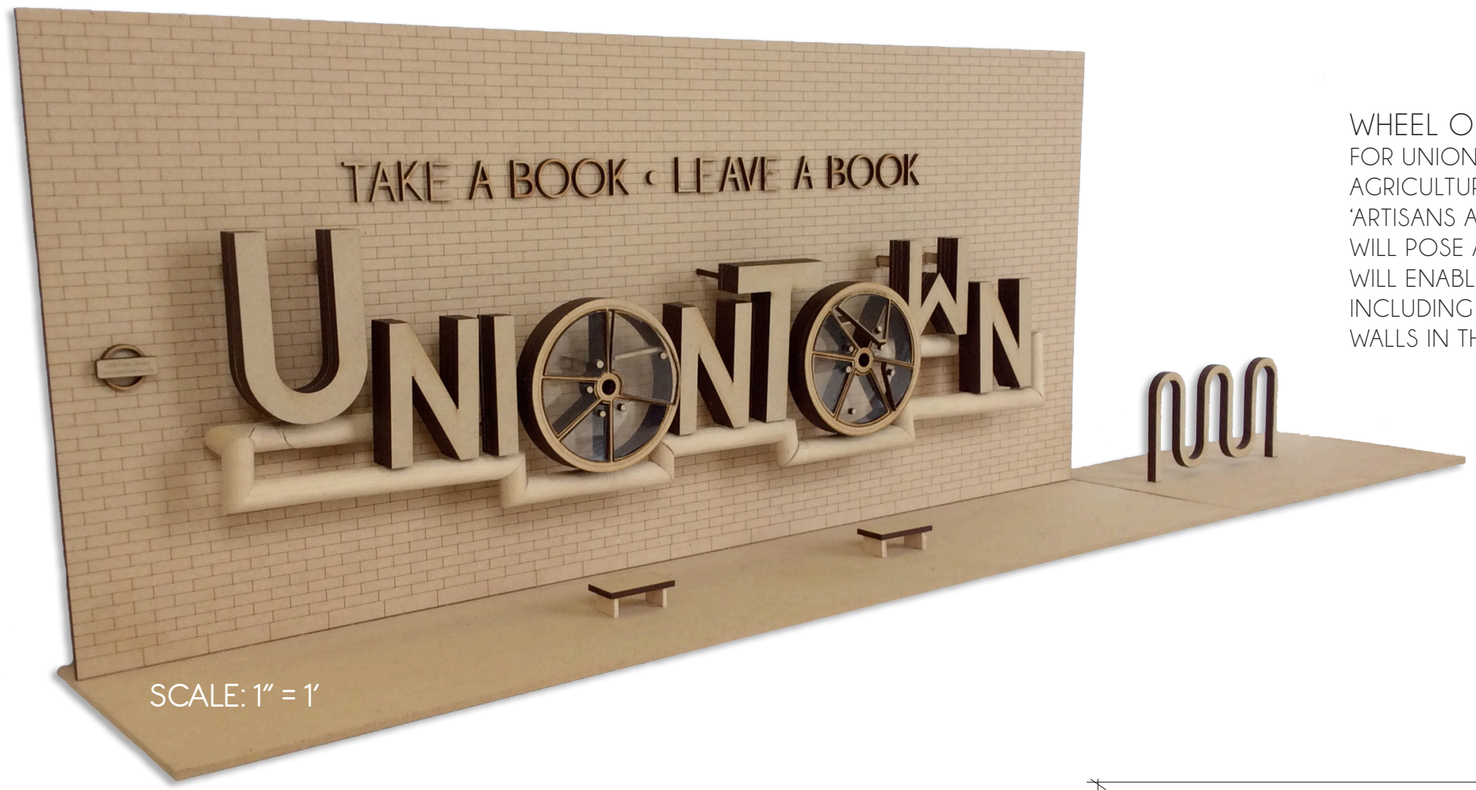

SCALE: 1" = 1'

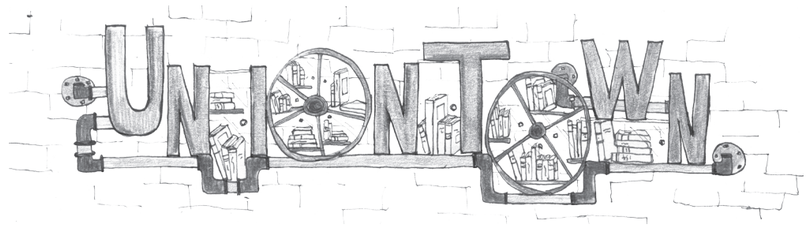

INITIAL CONCEPT DRAWING

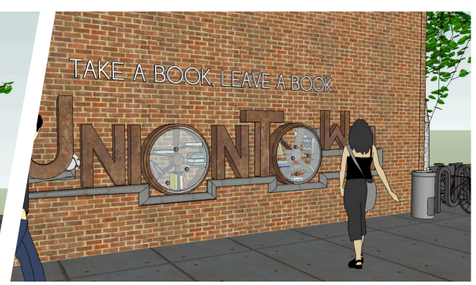

A UNIQUE & LOCALLY INSPIRED DESIGN TO BRING TOGETHER THE COMMUNITY IN AN ACCESSIBLE, KNOWN, YET SOMEWHAT PRIVATE SPACE, CATERING TO ALL.

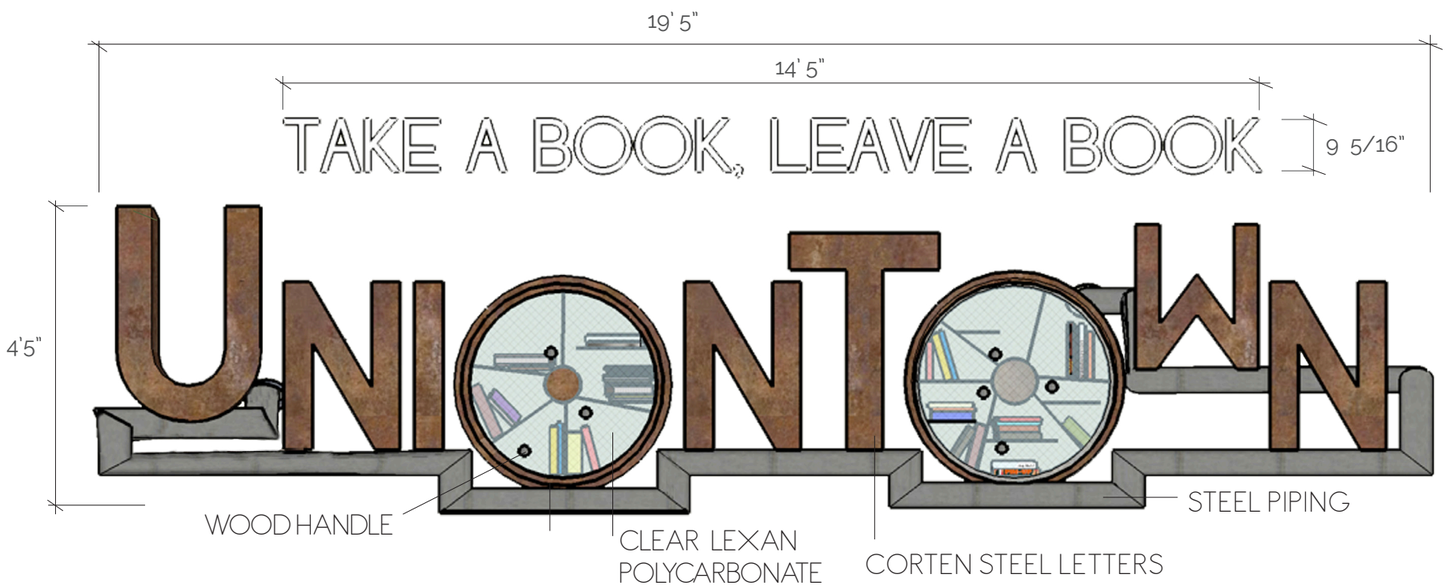

AN INTRICATE, FUN AND PLAYFUL DESIGN THAT WILL ACT AS A SIGN & TRADEMARK FOR THE TOWN WHILST PROVIDING A SERVICE OF LITERATURE.

AUDIENCE

Children/ Adults/ Parents/ Seniors

SELECTED LOCATION

186 S Montgomery Street

TOTAL COST

See Materials for a Break Down on Cost

Total Sturcture $O salvaged – $2457 new

Little Free Library $O salvaged – $ 285new
as a singular component
(depends on where the wagon wheels are sourced from)

MATERIALS

Corten Steel Letterforms
Hollow structure to help drainage.
Surface perline of rust.
total 725sf
cost $0 salvaged - $1400 new

Wagon Wheel 'O'
Salvaged wagon wheel as
the library section (1' 3" radius)
cost $0 donated, salvaged - $180 new

Sign Letters 'take a book, leave a book'
Aluminium Opificio 9 5/16" tall, 1" thick
cost $100 new (10approx per letter)

Steel Piping
4" non threaded drain pipes
Elbows & couplings
cost $0 salvaged - $560 new

Clear Lexan Polycarbonate
Library casement 324sf approx
Durable, UV resistant (prevents yellowing)
cost $0 salvaged - $16.90 new

Fastenings/mounting
Drill 1/2" hole into brick for
3/8" Threaded rod hanger anchor (15)
Threaded Rod (15) perpendicular to wall,
secured with mounting plate.
Nuts, bolts & flanges
cost $0 salvaged - $150 new

Cherry Wood
Shelving and door framing for the library
Cherry wood handles for library
cost $0 salvaged - $50 new

CONSTRUCTION DETAILS

Wall Attachment

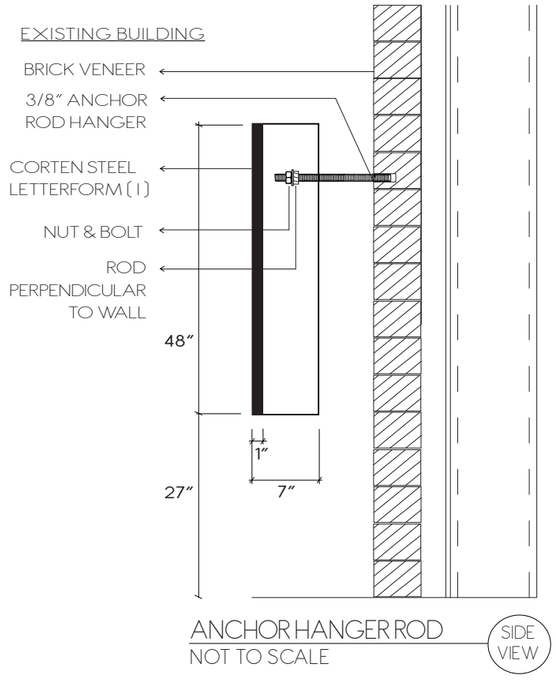

ANCHOR HANGER ROD
NOT TO SCALE
SIDE VIEW

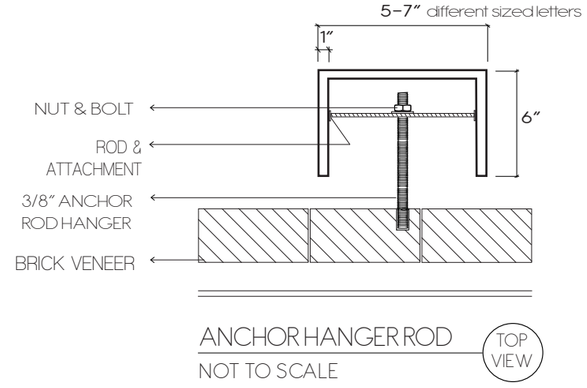

ANCHOR HANGER ROD
NOT TO SCALE
TOP VIEW
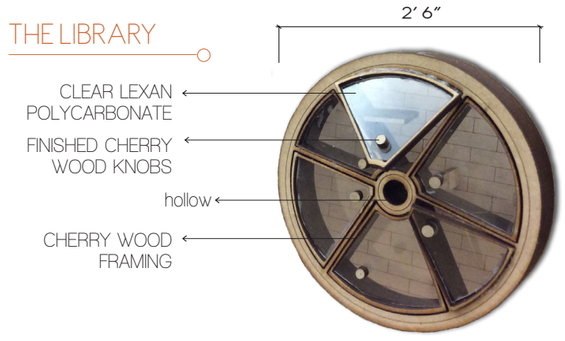
THE LIBRARY